Technical sheet :

TMM 25 ST5

MANITOU
HANDLING YOUR WORLD

	Technical characteristics		Metric
1.1	Manufacturer		MANITOU
1.2	Model Name		TMM 25 ST5
1.2.1	Reach out equipment		Pantograph
1.3	Power source		Diesel
1.4	Operator type		Seated
1.5	Max. capacity	Q	2500 kg
1.6	Load center of gravity	c	500 mm
1.8	Load distance, centre of drive axle to fork	x	490 mm
1.9	Wheelbase	y	1598 mm
	Weight		
	Standard mast reference of the machine		FVD 30
2.1	Service weight		2340 kg
2.2	Weight on front axle (laden) / rear axle (laden)		3585 kg / 1255 kg
2.3	Weight on front axle (Unladen) / rear axle (Unladen)		1085 kg / 1255 kg
	Wheels		
3.1	Tires type		Pneumatic
3.2	Dimensions of front wheels		27X10-12 IC30
3.3	Dimensions of rear wheels		27X10-12 IC30
3.5	Number of front wheels / rear wheels		2 / 1
3.5.2	Drive wheels (front / rear)		2 / 1
3.6	Front wheel gauge	b10	2151 mm
	Dimensions		
4.4	Max. lifting height	h3	4200 mm
4.7	Height of overhead guard (cabin)	h6	2120 mm
4.8	Seat height/stand height	h7	1070 mm
4.19	Overall length	l1	2650 mm
4.21	Overall width	b1	2406 mm
4.22	Forks section / width / length	s / e / l	40 mm x 122 mm x 1200 mm
4.23	Fork carriage ISO 2328 (class/form) A/B		2A
4.24	Fork carriage width	b3	1260 mm
4.26	Distance between support arms	b5	1165 mm
4.26	Distance between wheel arms/loading surfaces	b4	1600 mm
4.28	Max. horizontal extension at COG 600	l4	1000 mm
4.34	Aisle width for 800 x 1200 pallet lengthways	Ast	3363 mm
4.35	Turning radius	Wa	2463 mm
	Performances		
5.1	Travel speed (laden / unladen)		10.60 km/h - 10.70 km/h
5.2	Lifting speed (laden / unladen)		0.26 m/s / 0.24 m/s
5.3	Lowering speed (laden / unladen)		0.38 m/s / 0.21 m/s
5.7	Gradeability (laden / unladen)		50 % / 51 %
5.9	Acceleration time (laden / unladen)		4.10 s / 2.60 s
5.10	Service brake		Hydraulic brakes by loss of pressure
	Transmission type		Hydrostatic
	Engine		
7.1	Engine brand / norm / model		Kubota - Stage V / D1105-E4B-MNT-2
7.2	Engine power (Hp / kW)		25 Hp / 18.50 kW
7.3	Rated speed		3000 rpm
7.4	Number of cylinders / Capacity of cylinders		3 - 1123 cm³
	Miscellaneous		
8.1	Type of drive control		Cable
8.2	Working hydraulic pressure for attachments		190 bar
8.3	Oil flow rate for attachments		43 l/min
8.4	Sound level at the driver's ear according to DIN 12 053		84 dB

TMM 25 ST5 - Dimensional drawing

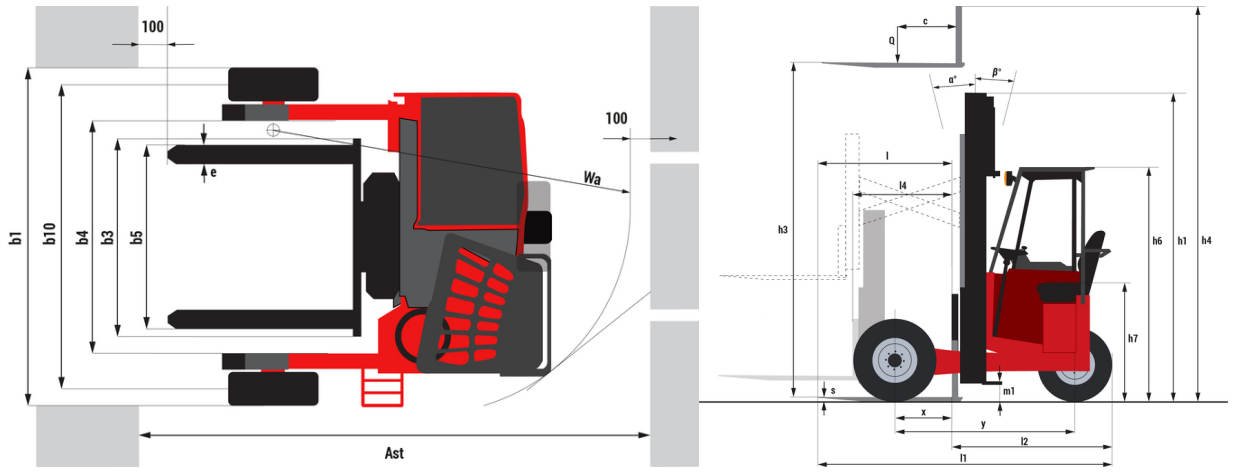

Characteristics of masts and residual capacities

		Full Visibility Duplex (FVD)		FVD 30	FVD 36	FVD 42
		h1 - Mast lowered height	mm	2392	2742	3090
		h3 - Mast lifting height	mm	3000	3600	4200
		h4 - Mast extended height	mm	4495	5095	5695
Residual Capacity (Maximum Height & LC = 600 mm)	Simple Reach	Pantograph reach in	kg	2500	2500	2500
		Pantograph reach out with stabilizers	kg	2000	1950	
		Pantograph reach out without stabilizers	kg	1050	1000	
		Telescopic forks reach in	kg	2500	2500	
		Telescopic Forks reach out with stabilizers	kg	1350	1300	
		Telescopic Forks reach out without stabilizers	kg	1150	1100	
	Double Reach	Pantograph & TF reach in	kg	2500	2500	
		Pantograph & TF reach out with stabilizers	kg	1100	1100	
		Pantograph & TF reach out without stabilizers	kg	550	550	

Head Office
B.P. 249 - 430 rue de l'Aubinière
44150 Ancenis Cedex - France
Tel: +33 (0)2 40 09 10 11 - Fax: +33 (0)2 40 09 10 97
www.manitou.com

This publication provides a description of the configuration versions and options for Manitou products, which may differ for equipment. The equipment presented in this brochure may be part of a series, as an option, or it may not be available, depending on the versions. Manitou reserves the right, at any time and without notice, to amend the specifications described and represented. The specifications provided do not bind the manufacturer. For more details, please contact your Manitou agent. This is not a contractually binding document. The presentation of the products is not contractually binding. List of specifications non-exhaustive. The logos as well as the visual identity of the company are owned by Manitou and cannot be used without authorisation. All rights reserved. The photos and diagrams contained in this brochure are only provided for consultation and information purposes.
MANITOU BF SA - Limited company with board of directors - Share capital: 39,668,399 euros - 857 802 508 RCS Nantes